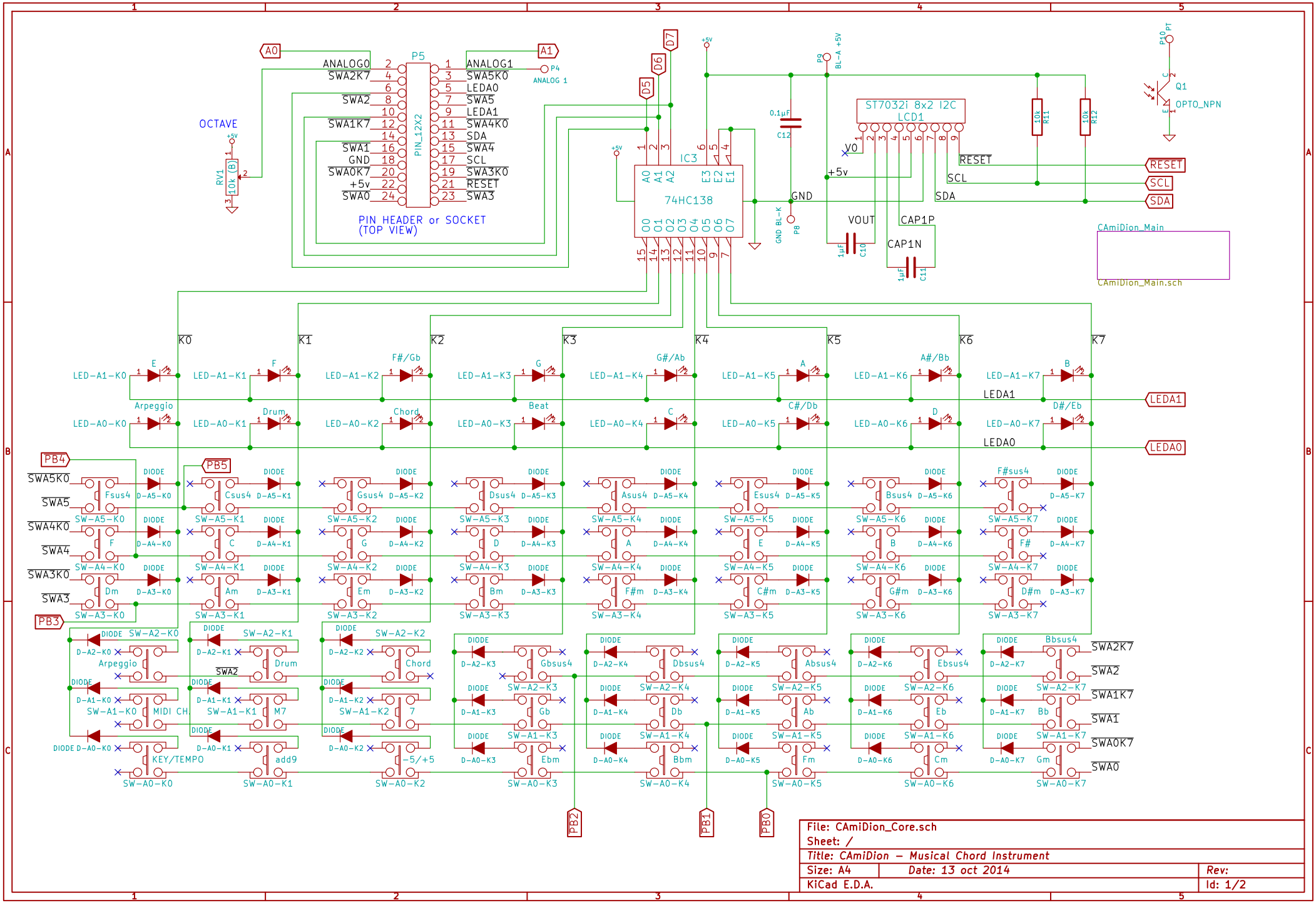
P5
PIN_12X2
ANALOG0
SWA2K7
SWA2
SWA1K7
SWA1
GND
SWA0K7
+5v
SWA0
ANALOG1
SWA5K0
LEDA0
SWA5
LEDA1
SWA4K0
SWA4
SDA
SCL
SWA3K0
RESET
SWA3
PIN HEADER or SOCKET
(TOP VIEW)
OCTAVE
RV1
10k (B)
A0
A1
P4
ANALOG 1
D7
D6
D5
IC3
74HC138
A0 A1 A2
E3 E2 E1
O0 O1 O2 O3 O4 O5 O6 O7
0.1µF
C12
GND
GND BL-K
P8
P9
BL-A +5V
ST7032i 8x2 I2C
LCD1
V0
+5v
VOUT
CAP1P
CAP1N
1µF
C10
C11
10k
R11
R12
P10
PT
Q1
OPTO_NPN
CAmiDion_Main
CAmiDion_Main.sch
K0
K1
K2
K3
K4
K5
K6
K7
LED-A1-K0
LED-A1-K1
LED-A1-K2
LED-A1-K3
LED-A1-K4
LED-A1-K5
LED-A1-K6
LED-A1-K7
E
F
F#/Gb
G
G#/Ab
A
A#/Bb
B
LED-A0-K0
LED-A0-K1
LED-A0-K2
LED-A0-K3
LED-A0-K4
LED-A0-K5
LED-A0-K6
LED-A0-K7
Arpeggio
Drum
Chord
Beat
C
C#/Db
D
D#/Eb
PB4
PB5
PB3
PB2
PB1
PB0
DIODE
Fsus4
Csus4
Gsus4
Dsus4
Asus4
Esus4
Bsus4
F#sus4
Dm
Am
Em
Bm
F#m
C#m
G#m
D#m
Gbsus4
Dbsus4
Absus4
Ebsus4
Bbsus4
Gb
Db
Ab
Eb
Bb
Ebm
Bbm
Fm
Cm
Gm
MIDI CH.
M7
7
KEY/TEMPO
add9
-5/+5
SW-A5-K0
SW-A5-K1
SW-A5-K2
SW-A5-K3
SW-A5-K4
SW-A5-K5
SW-A5-K6
SW-A5-K7
SW-A4-K0
SW-A4-K1
SW-A4-K2
SW-A4-K3
SW-A4-K4
SW-A4-K5
SW-A4-K6
SW-A4-K7
SW-A3-K0
SW-A3-K1
SW-A3-K2
SW-A3-K3
SW-A3-K4
SW-A3-K5
SW-A3-K6
SW-A3-K7
SW-A2-K0
SW-A2-K1
SW-A2-K2
SW-A2-K3
SW-A2-K4
SW-A2-K5
SW-A2-K6
SW-A2-K7
SW-A1-K0
SW-A1-K1
SW-A1-K2
SW-A1-K3
SW-A1-K4
SW-A1-K5
SW-A1-K6
SW-A1-K7
SW-A0-K0
SW-A0-K1
SW-A0-K2
SW-A0-K3
SW-A0-K4
SW-A0-K5
SW-A0-K6
SW-A0-K7
D-A5-K0
D-A5-K1
D-A5-K2
D-A5-K3
D-A5-K4
D-A5-K5
D-A5-K6
D-A5-K7
D-A4-K0
D-A4-K1
D-A4-K2
D-A4-K3
D-A4-K4
D-A4-K5
D-A4-K6
D-A4-K7
D-A3-K0
D-A3-K1
D-A3-K2
D-A3-K3
D-A3-K4
D-A3-K5
D-A3-K6
D-A3-K7
D-A2-K0
D-A2-K1
D-A2-K2
D-A2-K3
D-A2-K4
D-A2-K5
D-A2-K6
D-A2-K7
D-A1-K0
D-A1-K1
D-A1-K2
D-A1-K3
D-A1-K4
D-A1-K5
D-A1-K6
D-A1-K7
D-A0-K0
D-A0-K1
D-A0-K2
D-A0-K3
D-A0-K4
D-A0-K5
D-A0-K6
D-A0-K7
File: CAmiDion_Core.sch
Sheet: /
Title: CAmiDion – Musical Chord Instrument
Size: A4
Date: 13 oct 2014
Rev:
KiCad E.D.A.
Id: 1/2

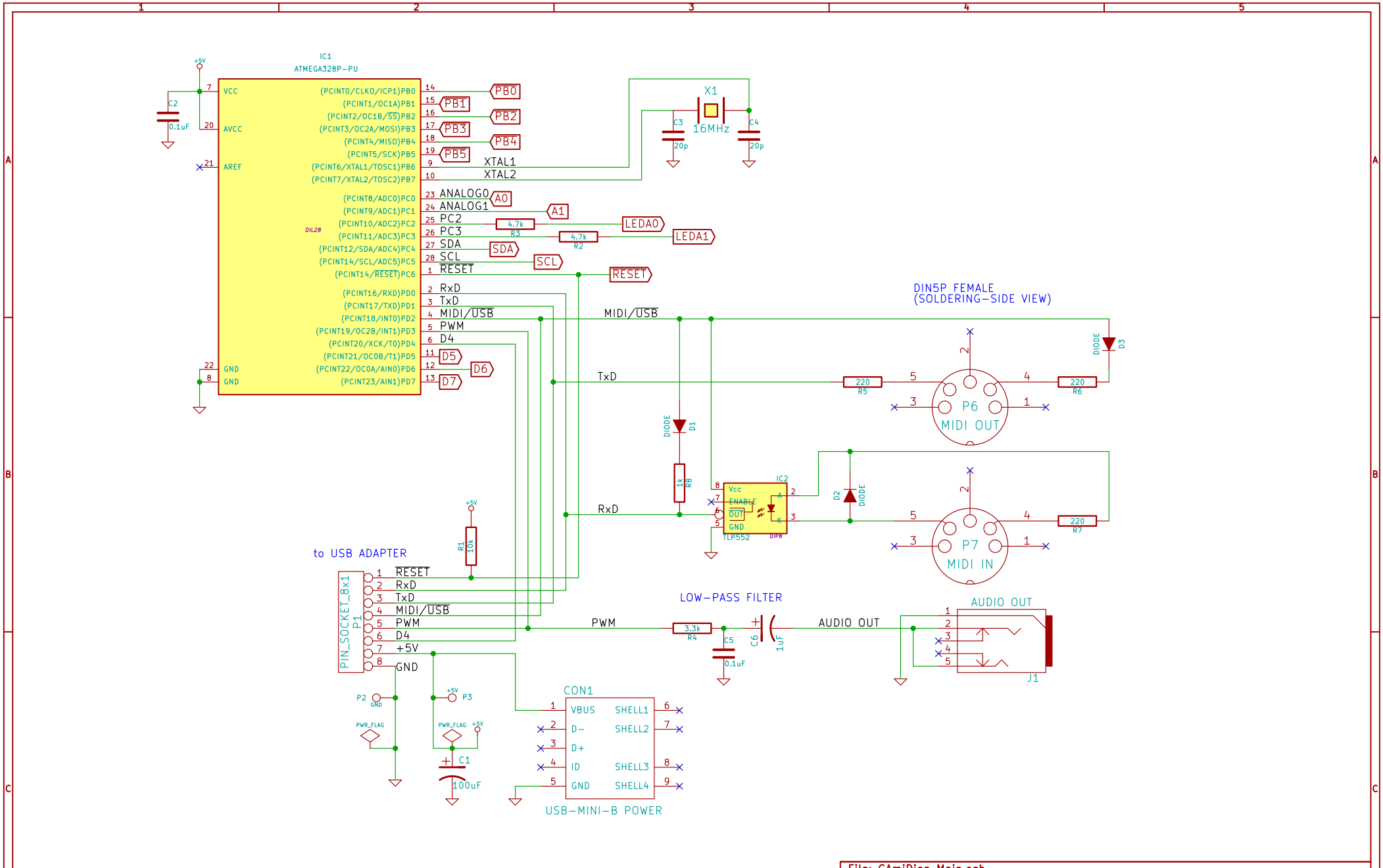

File: CAmiDion_Main.sch		
Sheet: /CAmiDion_Main/		
Title: CAmiDion – Musical Chord Instrument		
Size: A4	Date: 13 oct 2014	Rev:
KiCad E.D.A.		Id: 2/2